CAD FILE:

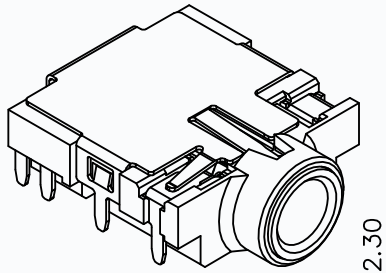

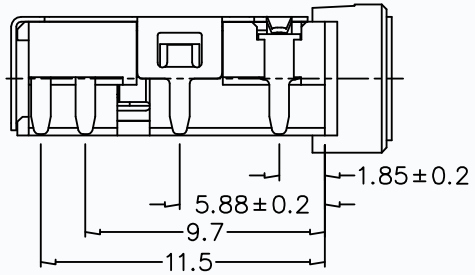

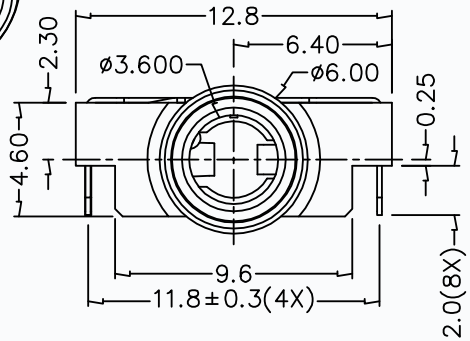

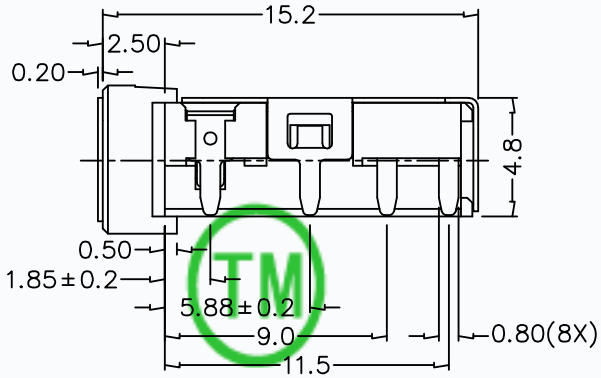

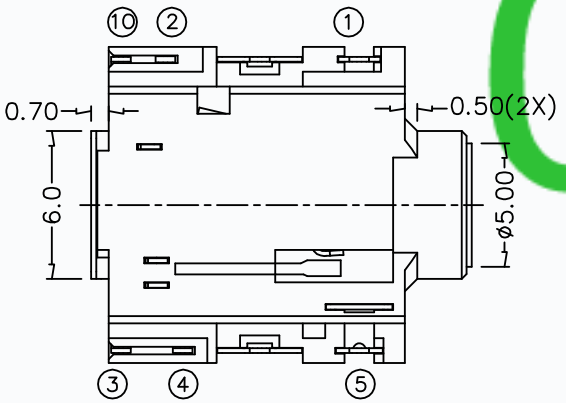

CMTDDZ

* MATERIAL

TERMINAL 1	: COPPER ALLOY
TERMINAL 2	: COPPER ALLOY
TERMINAL 3	: COPPER ALLOY
TERMINAL 4	: COPPER ALLOY
TERMINAL 5	: COPPER ALLOY
TERMINAL 10	: COPPER ALLOY
SHIELD	: COPPER ALLOY
BUSHING	: BRASS
HOUSING	: PA6T

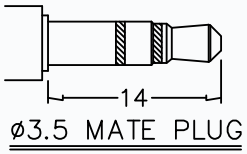

MODEL NO.	T13-3516D
SCHEMATIC	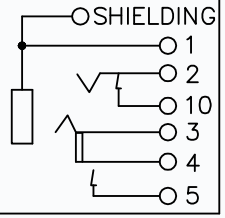

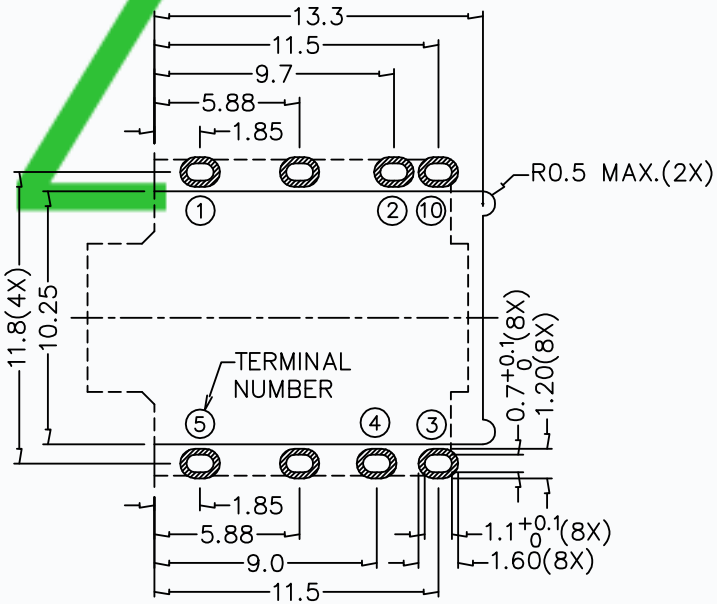

PCB LAYOUT
(TOP VIEW)

		TOLERANCE UNLESS SPECIFIED WITHIN 1.5mm : ±0.1mm OVER 1.5mm : ±0.2mm	THESE DRAWINGS AND SPECIFICATIONS ARE THE PROPERTY OF DONGGUAN TIANDU ELECTRONICS CO.,LTD. AND SHALL NOT BE REPROOUCED. COPIED OR USED IN ANY MANNER WITHOUT THE PRIOR WRITTEN CONSENT OF DONGGUAN TIANDU ELECTRONICS CO., LTD	TITLE : 3.5mm SMD PHONE JACK	UNIT : mm	DRWG NO.: CMTDDZ-T13-3516D-00	
				MODEL: T13-3516D	SCALE: 3:1	DWN.	ERIC	2013-6-17
				CMTDDZ 东莞市田都电子有限公司 DONGGUAN TIANDU ELECTRONICS CO.,LTD.		CHK'D	MAIKO	2013-6-17
APPD.	DESCRIPTIONS OF REVISION					APPD.	Coco	2013-6-17